Dimensions: 70 x 140 mm

OUTSIDE

NEED HELP?

BESOIN D'AIDE? | ¿NECESITA AYUDA? | BENÖTIGEN SIE HILFE? | HAI BISOGNO DI AIUTO? | YARDIMA MI IHTIYACINIZ VAR? | POTRZEBUJĘ POMOCY? | PRECISA DE AJUDA? | НУЖНА ПОМОЩЬ? | 助けが必要ですか? | 도움이 필요하십니까? | 需要幫助? | 需要帮助?

Manufacturer:
7365 Mission Gorge Rd. Ste. G
San Diego, CA 92120, USA
+1 858 268 1800
support@satechi.com
www.satechi.net

EU Authorized Representative:
Chemical Inspection and
Regulation Service Limited
CIRS, Regus Harcourt Centre
Dublin, Ireland, D02 HW77
+353 1 477 3710

UK Representative:
Chemical Inspection and
Regulation Service UK Ltd.
Unit 536, Salisbury House
London Wall, London, EC2M 5SQ
+44 20 3289 6395

ANGLE ADJUSTMENT

RÉGLAGE DE L'ANGLE | AJUSTE DE ÁNGULOS | WINKELEINSTELLUNG | REGOLAZIONE ANGOLO | |AÇI AYARI | REGULACJA KĄTA | AJUSTE DE ÂNGULO | РЕГУЛИРОВКА УГЛА | 角度調整 | 각도 조절 | 角度調整 | 角度调整

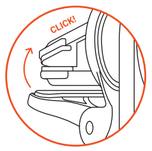

• Vent mount can adapt to horizontal or vertical car vents by turning clamp 90 degrees.

• Le support de ventilation peut s'adapter aux grilles de ventilation horizontales ou verticales en tournant le serre-joint de 90 degrés.

• La montura para rejilla de ventilación puede ajustarse para rejillas horizontales o verticales girando la abrazadera 90 grados.

• Die Lüftungshalterung ist durch Drehen der Klemme um 90° an horizontale oder vertikale Lüftungsöffnungen im Auto anpassbar.

• Il supporto per griglie di ventilazione può adattarsi alle bocchette dell'aria dell'auto orizzontali o verticali ruotando la morsetto di 90 gradi.

• Havalandırma deliği aparatı, 90 derece döndürülebilen menteşe ile yatay veya dikey araç havalandırma deliklerine uyum sağlayabilir.

• Uchwyt air vent można dopasować do poziomych lub pionowych otworów wentylacyjnych w samochodach, obracając zacisk o 90 stopni.

• O suporte de ventilação pode ser ajustado para aberturas de ventilação horizontais ou verticais do carro girando a braçadeira 90°.

• Крепление на воздуховод можно адаптировать к горизонтальным или вертикальным вентиляционным отверстиям автомобиля, повернув зажим на 90 градусов.

• ベントマウントは、クランプを90度回転させることで、水平または垂直の車のエアベントに適応できます。

• 벤트 마운트는 클램프를 90도 회전시켜 수평 또는 수직 자동차의 공기 통풍구에 적응할 수 있습니다.

• 透過將夾子旋轉 90 度，通風口安裝座可適應水平或垂直的汽車通風口。

• 通过将夾子旋转90度，通风口安装座可以适应水平或者垂直的汽车通风口。

• Adjust viewing angle by turning the charger 30 degrees up, down, left or right.

• Ajustez l'angle de vision en tournant le chargeur de 30 degrés vers le haut, le bas, la gauche ou la droite.

• Ajuste el ángulo de visión girando el cargador 30 grados hacia arriba, abajo, izquierda o derecha.

• Stellen Sie den Blickwinkel per 30°-Drehung des Ladegeräts nach oben, unten, links oder rechts ein.

• Regola l'angolo di visione girando il caricatore di 30 gradi su, giù, a sinistra o destra.

• Şarj cihazını 30 derece yukarı, aşağı, sola veya sağa çevirerek görüş açısını ayarlayın.

• Dostosuj kąt widzenia, obracając ładowarkę o 30 stopni w górę, w dół, w lewo lub w prawo.

• Ajuste o ângulo de visão girando o carregador 30 graus para cima, para baixo, para a esquerda ou para a direita.

• Отрегулируйте угол обзора, поворачивая зарядное устройство на 30 градусов вверх, вниз, влево или вправо.

• 充電器を上下左右に 30 度回転させて見やすい角度に調整します。

• 충전기를 상하좌우로 30도 회전시켜 보기 편한 각도로 조정합니다.

• 透過將充電器向上，向下，向左或向右旋轉30度來調整視角。

• 通过将充电器向上，向下，向左或向右旋转30度来调整视角。

IMPORTANT

IMPORTANT | IMPORTANTE | WICHTIG | IMPORTANTE | ÖNEMLİ | WAŻNY | IMPORTANTE | ВАЖНО | 重要 | 중요한 | 重要訊息 | 重要信息

• Only compatible with MagSafe phone cases or cases with magnets included.

• Uniquement compatible avec les coques de téléphone MagSafe ou les coques dotées d'aimants.

• Únicamente compatible con fundas MagSafe o fundas con imán incluido.

• Nur kompatibel mit MagSafe-Telefonhüllen oder Hüllen mit integrierten Magneten.

• Compatibile solo con custodie MagSafe o custodie con magneti inclusi.

• Yalnızca MagSafe telefon kılıfları veya mıknatıslı kılıflarla uyumludur.

• Kompatybilna tylko z etui MagSafe na telefony oraz etui z magnesem.

• Compatível apenas com capas MagSafe ou capas com ímã incluído.

• Совместимо только с MagSafe чехлами для телефонов или чехлами со встроенными магнитами.

• MagSafe スマホケースまたはマグネット付きケースのみと互換性があります。

• MagSafe 스마트폰 케이스 또는 자석이 있는 케이스와만 호환됩니다.

• 僅與 MagSafe 手機殼或磁性手機殼相容。

• 仅与 MagSafe 手机壳或磁性手机壳兼容。

• In order to reach 15W charging, phone must support MagSafe or Qi2 technology.

• Pour bénéficier d'une charge de 15W, le téléphone doit être compatible avec la technologie MagSafe ou Qi2.

• Para alcanzar los 15 W de carga, el teléfono debe ser compatible con la tecnología MagSafe o Qi2.

• Für eine Ladeleistung von 15W muss das Telefon die MagSafe- oder Qi2-Technologie unterstützen.

• Per raggiungere una ricarica di 15W, il telefono deve essere compatibile con la tecnologia MagSafe o Qi2.

• 15W şarja ulaşabilmek için telefonun MagSafe veya Qi2 teknolojisini desteklemesi gerekir.

• Aby uzyskać ładowanie o mocy 15 W, telefon musi obsługiwać MagSafe lub technologię Qi2.

• Para atingir o carregamento de 15 W, o telefone deve suportar a tecnologia MagSafe ou Qi2.

• Для зарядки мощностью 15 Вт телефон должен поддерживать технологию MagSafe или Qi2.

• 15W で充電するには、お使いのスマホが MagSafe または Qi2 技術をサポートしている必要があります。

• 15W로 충전하려면 스마트폰이 MagSafe 또는 Qi2 기술을 지원해야 합니다.

• 為達到15W充電效率，手機必須支援MagSafe或Qi2技術。

• 为达到15W充电效率，手机必须支持MagSafe或Qi2技术。

SATECHI

Qi2 WIRELESS CAR CHARGER

USER MANUAL

Manuel de L'utilisateur | Manual de Usuario | Benutzerhandbuch | Manuale Utente | Kullanım Kılavuzu | Instrukcja Obsługi | Manual de Usuário | Руководство Пользователя | ユーザーマニュアル | 사용자 매뉴얼 | 使用者説明 | 用户说明

INSIDE

FUNCTIONS

FONCTIONS | FUNCIONES | FUNKTIONEN | FUNZIONI | FONKSİYONLAR | FUNKCJE | FUNÇÕES | ФУНКЦИИ | 機能 | 기능 | 功能 | 功能

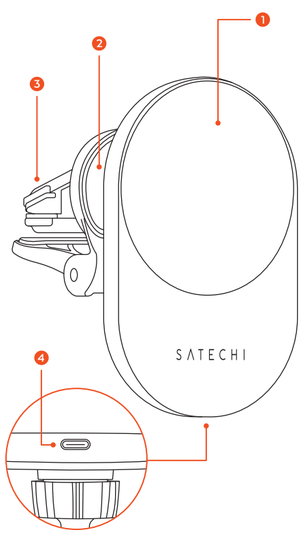

1. Qi2 Magnetic Wireless Charger (Max. 15W)

Chargeur Sans Fil Magnétique Qi2 (Max 15W) | Cargador Magnético Inalámbrico Qi2 (máx. 15W) | Qi2 Magnetisches Kabelloses Ladegerät (Max. 15W) | Caricatore Wireless Magnetico Qi2 (max 15 W) | Qi2 Manyetik Kablosuz Şarj Cihazı (Maks. 15 W) | Magnetyczna Ładowarka Bezprzewodowa Qi2 (Maks. 15 W) | Carregador Magnético Sem Fio (máx. 15W) | Магнитное Беспроводное Зарядное Устройство Qi2 (макс. 15 Вт) | Qi2 マグネットワイヤレスチャージャー(最大15W) | Qi2 자석 무선 충전기 (최대 15W) | Qi2 磁吸無線充電器(最大15W) | Qi2 磁吸无线充电器(最大15W)

2. Adjustable Hinge

Charnière Adjustable | Bisagra Ajustable | Verstellbares Scharnier | Cerniera Regolabile | Ayarlanabilir Menteşe | Regulowany Zawias | Dobradiça Ajustável | Регулируемый Шарнир | 調整可能ヒンジ | 조정가능한 경첩 | 可調控鉸鏈 | 可调控铰链

3. Air Vent Mount

Support de Ventilation | Montura para Rejilla de Ventilación | Belüftungshalter | Supporto Bocchette d'aerazione | Havalandırma Montajı | Uchwyt Air Vent | Suporte de Ventilação | Крепление На Воздуховод | エアベントマウント | 에어벤트 마운트 | 通風口安裝座 | 通风口安装座

4. USB-C Connector

Connecteur USB-C | Conector USB-C | USB-C-Anschluss | Connettore USB-C | USB-C Konektörü | Złącze USB-C | Conector USB-C | Разъем USB-C | USB-C コネクタ | USB-C 커넥터 | USB-C連接器 | USB-C连接器

CHARGING YOUR DEVICES

CHARGEMENT DE VOS APPAREILS | CARGA DE DISPOSITIVOS | AUFLADEN IHRER GERÄTE | CARICA I DISPOSITIVI | CIHAZLARINIZIN ŞARJI | ŁADOWANIE TWOICH URZĄDZEŃ | CARREGAMENTO DO DISPOSITIVO | ЗАРЯДКА ВАШИХ УСТРОЙСТВ | デバイスを充電 | 기기 충전 | 為您的裝置充電 | 为您的设备充电

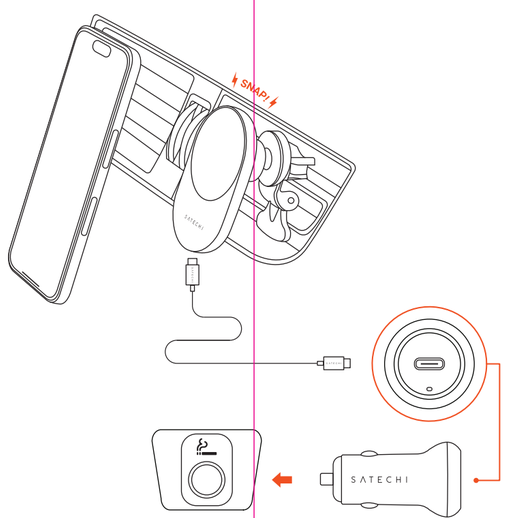

RF exposure statement

This equipment complies with the FCC RF radiation exposure limits set forth for an uncontrolled environment. This equipment should be installed and operated with a minimum distance of 20cm between the radiator and any part of your body.

This equipment meets the exemption from the routine evaluation limits in section 2.5 of RSS-102. It should be installed and operated with a minimum distance of 20cm between the radiator and any part of your body.

Cet équipement est conforme à l'exemption des limites d'évaluation habituelle de la section 2.5 de la norme RSS-102. Il doit être installé et utilisé à une distance minimale de 20 cm entre le radiateur et toute partie de votre corps.

FCC Warning

This device complies with Part 15 of the FCC Rules. Operation is subject to the following two conditions:

(1) This device may not cause harmful interference, and (2) this device must accept any interference received, including interference that may cause undesired operation.

Note: This equipment has been tested and found to comply with the limits for a Class B digital device, pursuant to part 15 of the FCC Rules. These limits are designed to provide reasonable protection against harmful interference in a residential installation. This equipment generates, uses and can radiate radio frequency energy and, if not installed and used in accordance with the instructions, may cause harmful interference to radio communications. However, there is no guarantee that interference will not occur in a particular installation. If this equipment does cause harmful interference to radio or television reception, which can be determined by turning the equipment off and on, the user is encouraged to try to correct the interference by one or more of the following measures:

—Reorient or relocate the receiving antenna.

—Increase the separation between the equipment and receiver.

—Connect the equipment into an outlet on a circuit different from that to which the receiver is connected.

—Consult the dealer or an experienced radio/TV technician for help.

NOTE 2: Any changes or modifications to this unit not expressly approved by the party responsible for compliance could void the user's authority to operate the equipment.

CE DECLARATION OF CONFORMITY

Satechi declares that this product is in compliance with the essential requirements and other relevant provisions of applicable EC directives. For Europe, a copy of the Declaration of Conformity for this product may be obtained by visiting https://satechi.net/support/doc

WEEE Information

According to the WEEE (Waste Electrical and Electronic Equipment) Directive, do not dispose of this product as household waste or commercial waste. Waste electrical and electronic equipment should be appropriately collected and recycled as required by practices established for your country. For information on recycling of this product, please contact your local authorities, your household waste disposal service, or the shop where you purchased the product.

IC WARNING

This device contains licence-exempt transmitter(s) that comply with Innovation, Science and Economic Development Canada's licence-exempt RSS(s). Operation is subject to the following two conditions:
(1) This device may not cause interference.
(2) This device must accept any interference, including interference that may cause undesired operation of the device.

L'émetteur/récepteur exempt de licence contenu dans le présent appareil est conforme aux CNR d'Innovation, Sciences et Développement économique Canada applicables aux appareils radio exempts de licence. L'exploitation est autorisée aux deux conditions suivantes:
1. L'appareil ne doit pas produire de brouillage;
2. L'appareil doit accepter tout brouillage radioélectrique subi, même si le brouillage est susceptible d'en compromettre le fonctionnement.

FR ÉLÉMENTS D'EMBALLAGE

FR Cet appareil se recycle — À DÉPOSER EN MAGASIN ou À DÉPOSER EN DÉCHÈTERIE

Points de collecte sur www.quefairedemesdechets.fr
Privilégiez la réparation ou le don de votre appareil !